CARES Technical Approval Report TA1-B&C 5052

Issue 3

HY-TEN REINFORCEMENT

Hy-Ten
HT(S), HT (P), (EP) and (LT) Welded Couplers

Assessment of the Hy-Ten HT(S), HT (P), (EP) and (LT) Welded Coupler Product and Quality System for Production

CARES TECHNICAL APPROVAL 5052

UKAS PRODUCT CERTIFICATION 0002

Product

Hy-Ten HT(S), HT (P), (EP) and (LT) Welded Couplers for reinforcing steel

Product approval held by:

Chatham Docks
Chatham
Kent ME4 4SR
UK

Tel: 0800 037 1014
Fax: 01634 892693
Email: kent@hy-ten.co.uk

1 Product Summary

Hy-Ten HT(S), HT (P), (EP) and (LT) Welded Couplers are for the mechanical connection of deformed high yield carbon steel bars for the reinforcement of concrete complying with the requirements of BS4449 reinforcement. See tables 1 - 6 for details.

1.1 Scope of Application

Hy-Ten HT(S), HT (P), (EP) and (LT) Welded Couplers have been evaluated for use as follows:

a) for static BS8110 and EC2 applications in tension only in accordance with CARES Appendix TA1-B.

Hy-Ten HT(S) and HT (P) Welded Couplers have been evaluated for use as follows:

b) for static applications in tension only in accordance with CARES Appendix TA1-C. See tables 1 - 6 for details.

1.2 Design Considerations

BS 8110 Clause 3.12.8.9 Laps and Joints states "Connections transferring stress may be lapped, welded or joined with mechanical devices. They should be placed, if possible, away from points of high stress and should preferably be staggered". However, BS 8110 Clause 3.12.8.16.2 Bars in tension states "The only acceptable form of full-strength butt joint for a bar in tension comprises a mechanical coupler" satisfying specified slip and tensile strength criteria.

Eurocode 2, Clause 8.7 Laps and mechanical couplers 8.7.1 General (1)P "Forces are transmitted from one bar to another by:

- lapping of bars, with or without bends or hooks;
- welding;
- mechanical devices assuring load transfer in tension-compression or in compression only."

Clause 8.8 Additional rules for large diameter bars goes on to state that "Splitting forces are higher and dowel action is greater with the use of large diameter bars. Such bars should be anchored with mechanical devices."

The specified cover for fire resistance and durability should be provided to the coupler sleeve. All couplers have been designed with controlled mechanical properties to be compatible with reinforcing bars complying with reinforcement of the relevant Grade in accordance with BS4449.

1.3 Conclusion

It is the opinion of CARES that Hy-Ten HT(S), HT (P), (EP) and (LT) Welded Couplers are satisfactory for use within the limits stated in paragraph 1.1 clause a) and b) respectively when applied and used in accordance with the manufacturer's instructions and the requirements of this certificate.

L. Brankley
Chief Executive Officer

September 2018

2 Technical Specification

2.1 General

The function of HT(S), HT (P), (EP) and (LT) Welded Couplers is to connect deformed steel reinforcing bars complying with BS 4449 for TA1-B and TA1-C applications as defined in tables 1 - 6 and thereby create structural continuity of the reinforcing system.

2.2 HT(S), HT (P), (EP) and (LT) and Transitional Welded Couplers

The HT(S), HT (P), (EP) and (LT) Welded Coupler is a system providing a mechanical connection of deformed carbon steel bars the reinforcement of concrete, complying with the tensile properties of BS4449.

HT Transitional Couplers enables re-bar of varying diameters, to be effectively and rapidly coupled.

The table shown on page 4 refers to the diameters which can be transitionally coupled, the system is CARES approved for transitional joints 32mm and 40mm in standard, S type.

See tables 1 - 6 for product details.

HT(S) Welded Coupler

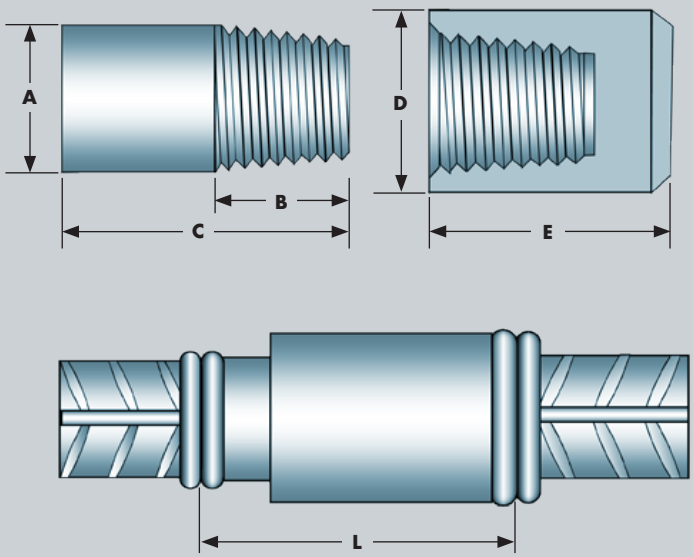

Coupler Ref	Bar Dia	A mm	B mm	C mm	D mm	E mm	L mm	TA1-B/ B500B/C	TA1-C/ B500C
HT(S)12	12	14	13	38	19	29	50 ±2	✓	✖
HT(S)16	16	19	20	43	25	40	60 ±3	✓	✖
HT(S)20	20	19	20	43	25	40	60 ±3	✓	✖
HT(S)25	25	25	25	55	34	50	70 ±3	✓	✖
HT(S)32	32	32	32	63	42	63	80 ± 4	✓	✓
HT(S)40	40	46	40	75	53	70	95 ±5	✓	✓

Table 1

HT(S) Transitional Welded Couplers

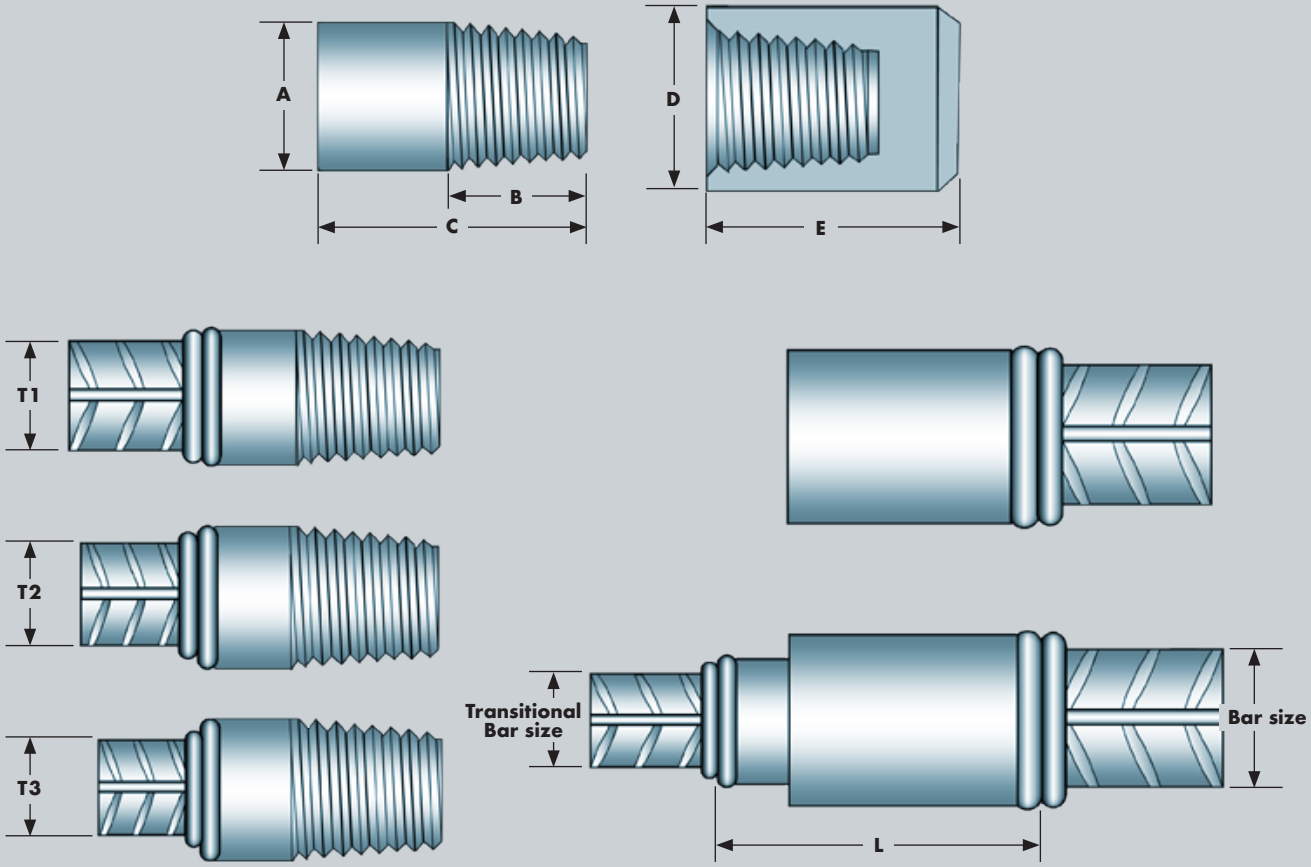

Coupler Ref	Bar Dia	Transitional Bar Dia T1	T2	T3	A mm	B mm	C mm	D mm	E mm	L mm	TA1-B/ B500B	TA1-B/ B500C
HT(S)32	32	25	20	16	32	32	63	42	63	85 ±4	✓	✖
HT(S)40	40	32	25	20	46	40	75	53	70	100 ±5	✓	✖

Table 2

HT (P) Welded Couplers

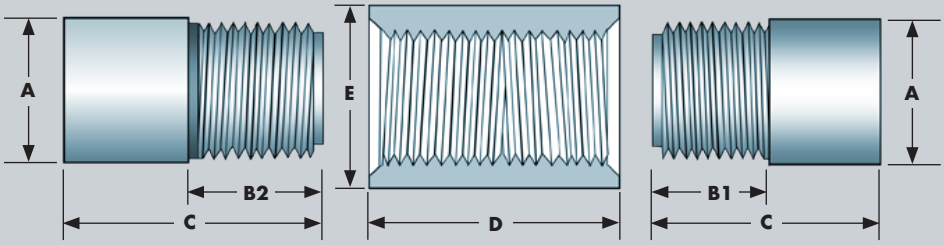

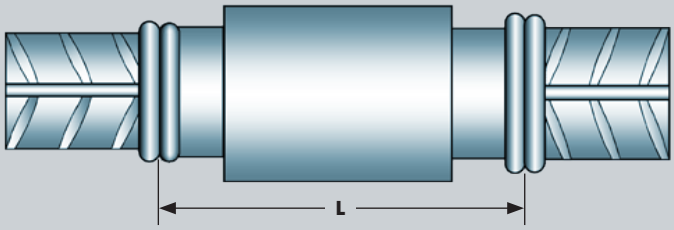

Coupler Ref	Bar Dia	A mm	B1 mm	B2 mm	C mm	D mm	E mm	L mm	TA1-B/ B500B	TA1-B/ B500C	TA1-C/ B500C
HT(P)20	20	22	19	22	45	39	28	75 ±2	✓	✓	✖
HT(P)25	25	28	25	28	55	51	36	95 ±3	✓	✓	✖
HT(P)32	32	36	30	33	65	60	46	115 ±3	✓	✓	✓
HT(P)40	40	42	37	40	75	73	55	130 ±4	✓	✓	✓

Table 3

HT (EP) Welded Couplers

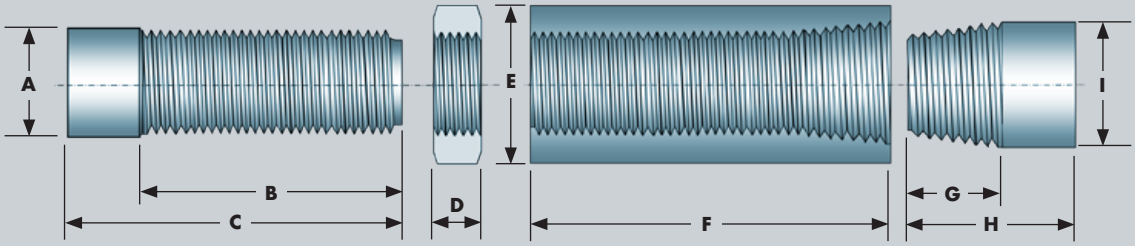

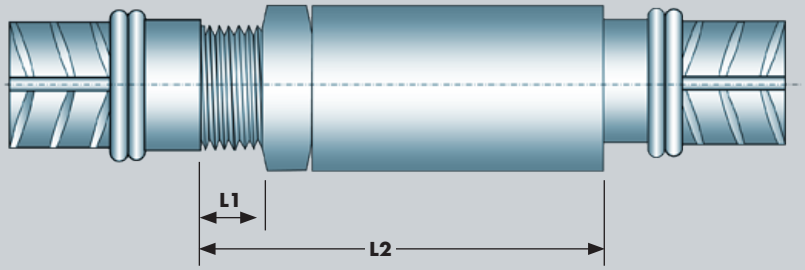

Coupler Ref	Bar Dia	A mm	B mm	C mm	D mm	E mm	F mm	G mm	H mm	I mm	L1 (min)	L1 (max)	L2 (min)	L2 (max)	TA1-B/ B500B/C
HT(EP)20	20	19	61	86	15	30	46	16	41	24	11	30	72	90	✓
HT(EP)25	25	25	72	100	15	38	57	20	50	30	13	34	85	106	✓
HT(EP)32	32	32	81	110	15	48	66	25	58	38	17	39	98	120	✓
HT(EP)40	40	46	93	128	15	55	78	30	64	46	20	45	113	138	✓

Table 4

HT (LT) Welded Couplers

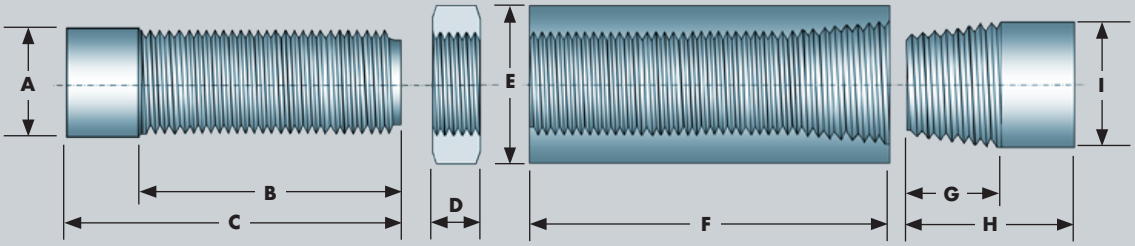

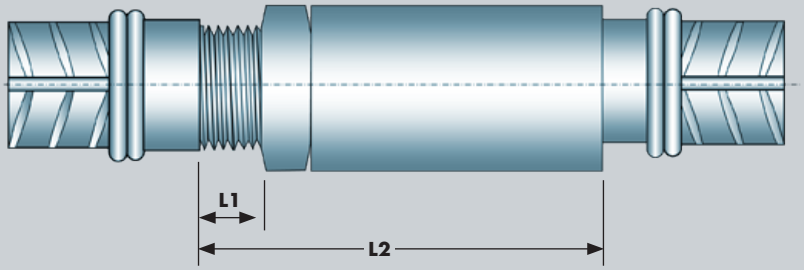

Coupler Ref	Bar Dia	A mm	B mm	C mm	D mm	E mm	F mm	G mm	H mm	I mm	L1 (min)	L1 (max)	L2 (min)	L2 (max)	TA1-B/ B500B/C
HT(LT)25	25	25	102	130	15	38	87	20	50	30	20	65	122	167	✓
HT(LT)32	32	32	111	141	15	48	96	25	58	38	25	70	136	181	✓
HT(LT)40	40	46	123	158	15	55	108	30	64	46	30	75	153	198	✓

Table 5

HT (EP) Transitional Positional Coupler

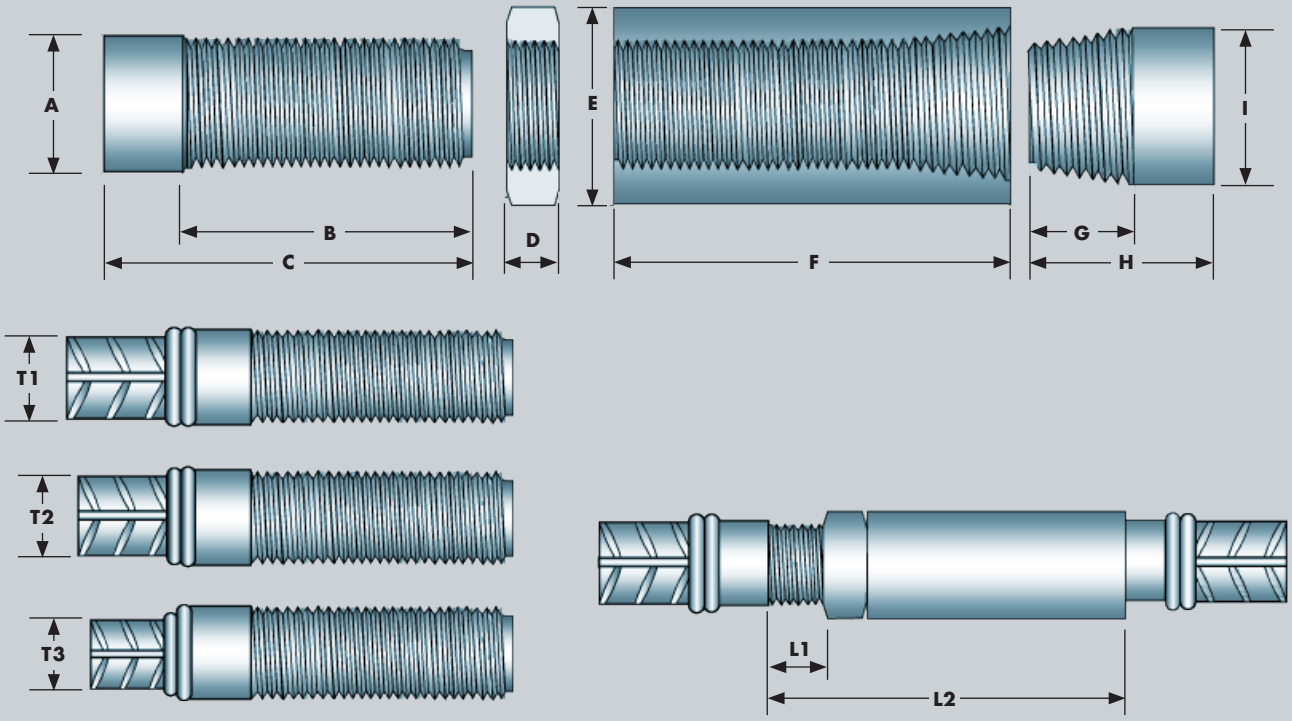

Coupler Ref	Bar Dia	Transition Bar Dia T1	T2	T3	A mm	B mm	C mm	D mm	E mm	F mm	G mm	H mm	I mm	L1 (min)	L1 (max)	L2 (min)	L2 (max)	TA1-B/ B500B/C
HT(EP)32	32	25	20	16	32	81	110	15	48	66	25	58	38	17	39	98	120	✓
HT(EP)40	40	32	25	20	46	93	128	15	55	78	30	64	46	20	45	113	138	✓

Table 6

3 Product Performance and Characteristics

Full destructive tests have been carried out to demonstrate compliance with the performance requirements defined in CARES Appendix TA1-B and TA1-C when used with reinforcing bars to BS4449 Grade B500B and B500C respectively: as appropriate (see tables for details).

CARES APPENDIX TA1-B strength requirements

- Permanent deformation is less than 0.10mm after loading to $0.65f_{yk}$ in tension or compression.
- 99% characteristic tensile strength is greater than 540 MPa with grade B500B reinforcement or 575 MPa with grade B500C reinforcement.

CARES APPENDIX TA1-C tensile strength requirements

- Permanent deformation is less than 0.10mm after loading to $0.65f_{yk}$ in tension for grade B500C reinforcement.
- Tensile strength ≥ 1.15, ≤ 1.35 of the actual reinforcement yield strength (Re_{act}) with BS449 grade B500C reinforcement including:
  - low cycle fatigue: 100 cycle @ 5-90% $Re_{(char)}$
  - and cold soak at -7°C for 24 hours
  - and a bar break mode of failure

4 Installation

Coupler TYPE: HT(S)

The HT(S) Coupler is always delivered to site welded to the appropriate re-bar. The formation of the joint is achieved by screwing the two sections together, ie male and female elements.

The joint should always be tightened by the use of a wrench, until there is no further movement available between the two sections.

Installation instructions

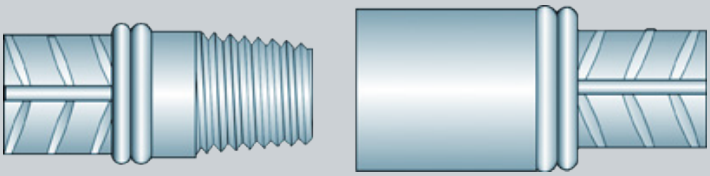

1 The two sections of the joint are brought together

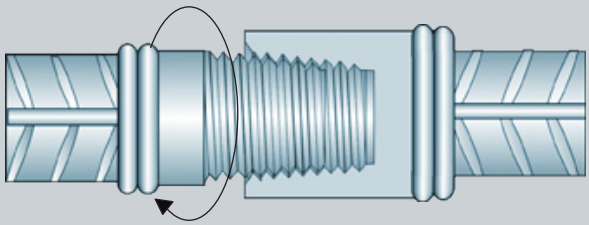

2 The joint is then screwed together using a wrench

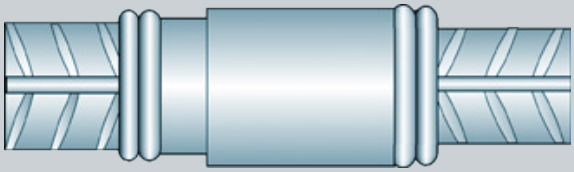

3 Finished joint tightened with a wrench until no further movement between sections

Coupler TYPE: HT (P)

Coupler TYPE: HT (P) (with left and right screw for un-rotatable but moveable rebar)

Installation instructions

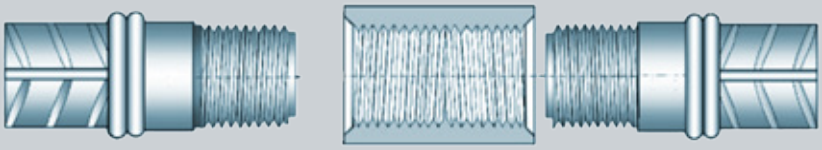

1 The two sections of the joint and female coupler are brought together

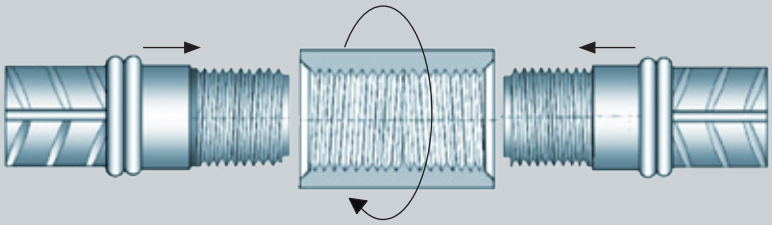

2 Both sections are then screwed together

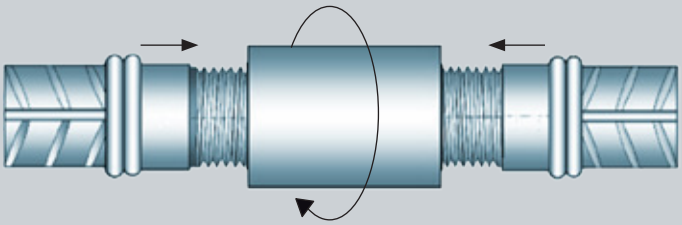

3 Finished joint tightened with a wrench until no further movement between sections

4 Finished Installation

Coupler TYPE: HT (EP) and HT (LT)

Coupler TYPE: HT (EP) and HT (LT). (For non-rotatable and non-moveable rebar)

Installation instructions

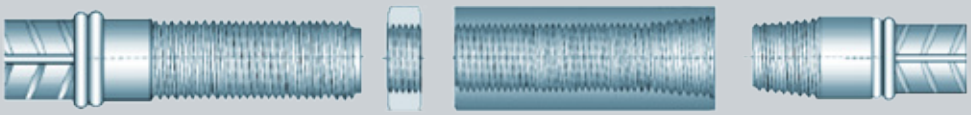

1 Both the welded sections, female coupler and lock nut are brought together

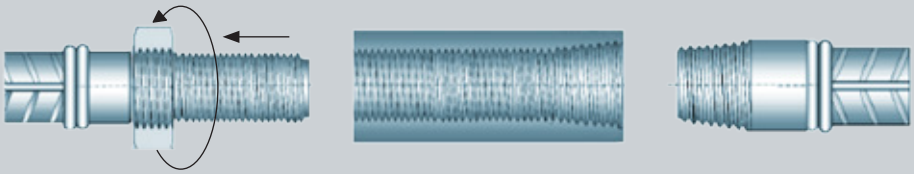

2-1 Spin the lock nut up the parallel thread as far as it will go

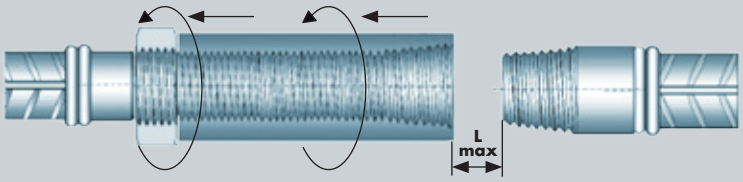

2-2 Spin the female coupler up the parallel threaded male section as far as it will go. Bring the tapered thread male section close to the female coupler. The gap between the two components should be less than the maximum extension limit as shown above

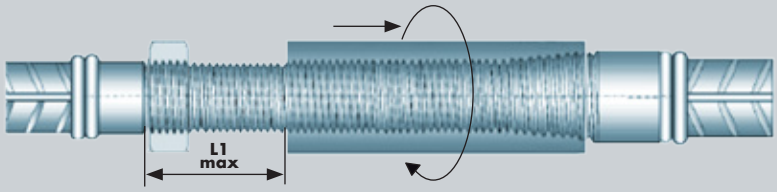

3 Turn the female coupler off the parallel threaded section and onto the tapered thread of the male coupler, tighten it with a wrench until there is no further movement

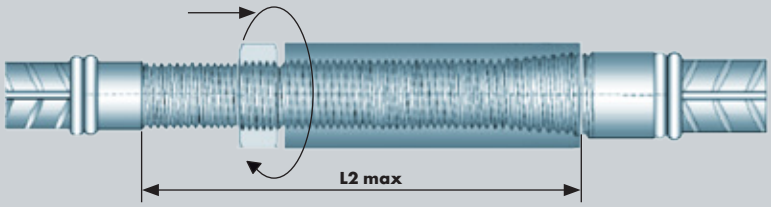

4 Spin the lock nut down the parallel thread and tighten the lock nut with a wrench behind the female coupler

5 Finished Installation

5 Safety Considerations

The friction welding of the couplers is undertaken at the Hy-Ten factory in Chatham. The couplers are delivered to the factory, packaged in 20kg boxes. A full risk assessment has been undertaken by Hy-Ten for this manufacturing process.

On site, the usual safety precautions should be followed when handling re-bar and the use of gloves and other relevant PPE is always advised.

6 Product Testing and Evaluation

HT(S), HT (P), (EP) and (LT) Welded Couplers have been tested to satisfy the requirements of CARES Appendix TA1-B for Couplers with reinforcing bars to BS4449 Grade B500B and B500C as appropriate (see tables for details). Appendix TA1-C for couplers with reinforcing bars to BS4449 Grade B500C. The testing comprised the following elements:

- Tensile Strength
- Permanent Deformation
- Low cycle fatigue (TA1-C)
- Cold Soak (TA1-C)

The products are subject to a programme of periodic testing to ensure that they remain within the performance limits of this technical approval.

7 Quality Assurance

HT(S), HT (P), (EP) and (LT) Welded Couplers are produced under an ISO9001 quality management system certified by CARES. The quality management system scheme monitors the production of the couplers and ensures that materials and geometry remain within the limits of this technical approval.

8 Building Regulations

8.1 The Building Regulations (England and Wales)

Structure, Approved Document A

HT(S), HT (P), (EP) and (LT) Welded Couplers, when used in EC2 based designs using the data contained within this technical approval, satisfy the relevant requirements of The Building Regulations (England and Wales), Approved Document A.

Materials and Workmanship, Approved Document

This technical approval gives assurance that the HT(S), HT (P), (EP) and (LT) Welded Couplers comply with the material requirements of EC2.

8.2 The Building Regulations (Northern Ireland)

Materials and Workmanship

This technical approval gives assurance that HT(S), HT (P), (EP) and (LT) Welded Couplers comply with the material requirements of EC2 by virtue of regulation *23, Deemed to satisfy provisions regarding the fitness of materials and workmanship.*

8.3 The Building Standards (Scotland)

Fitness of Materials

This technical approval gives assurance that HT(S), HT (P), (EP) and (LT) Welded Couplers comply with the material requirements of EC2 by virtue of *Clause 0.8.*

Structure

HT(S), HT (P), (EP) and (LT) Welded Couplers, when used in EC2 based designs using the data contained within this technical approval, satisfy the requirements of *The Building Standards (Scotland) Clause 1.*

9 References

- BS 4449: 2005: Steel for the reinforcement of concrete - Weldable reinforcing steel - Bar, coil and decoiled product - Specification.
- BS EN ISO 9001: Quality management systems - Requirements.
- Quality and Operations Schedule for the Technical Approval of Couplers for Reinforcing Steel and Reinforcement Anchors For BS8110 and EN1992-1-1 Applications for Static Loading in Tension or Tension and Compression.
- BS EN 1992-1-1:2004 Eurocode 2 Design of concrete structures - General rules for buildings.
- Quality and Operations Schedule for the Technical Approval of Tension or Tension- compression Couplers for Reinforcing Steel and Reinforcement Anchors for Sellafield Standard Applications.
- Sellafield Engineering Standard ES_0_3110_1-Issue 1 mechanical splices and anchors.

10 Conditions

1. The quality of the materials and method of manufacture have been examined by CARES and found to be satisfactory. This Technical Approval will remain valid provided that:

   a. The product design and specification are unchanged.
   b. The materials, method of manufacture and location are unchanged.
   c. The manufacturer complies with CARES regulations for Technical Approvals.
   d. The manufacturer holds a valid CARES Certificate of Product Assessment.
   e. The product is installed and used as described in this report.

2. CARES make no representation as to the presence or absence of patent rights subsisting in the product and/or the legal right of Hy-Ten to market the product.

3. Any references to standards, codes or legislation are those which are in force at the date of this certificate.

4. Any recommendations relating to the safe use of this product are the minimum standards required when the product is used. These requirements do not purport to satisfy the requirements of the Health and Safety at Work etc Act 1974 or any other relevant safety legislation.

5. CARES does not accept any responsibility for any loss or injury arising as a direct or indirect result of the use of this product.

6. This Technical Approval Report should be read in conjunction with CARES Certificate of Product Assessment No 5052. Confirmation that this technical approval is current can be obtained from UK CARES.

TECHNICAL APPROVAL
5052

UKAS PRODUCT CERTIFICATION
0002

UK CARES
Pembroke House
21 Pembroke Road
Sevenoaks
Kent TN13 1XR

Phone: +44(0)1732 450000
E-mail: general@ukcares.com
URL: www.ukcares.com

Independent Product Assessments for the Construction Industry

7.1.22